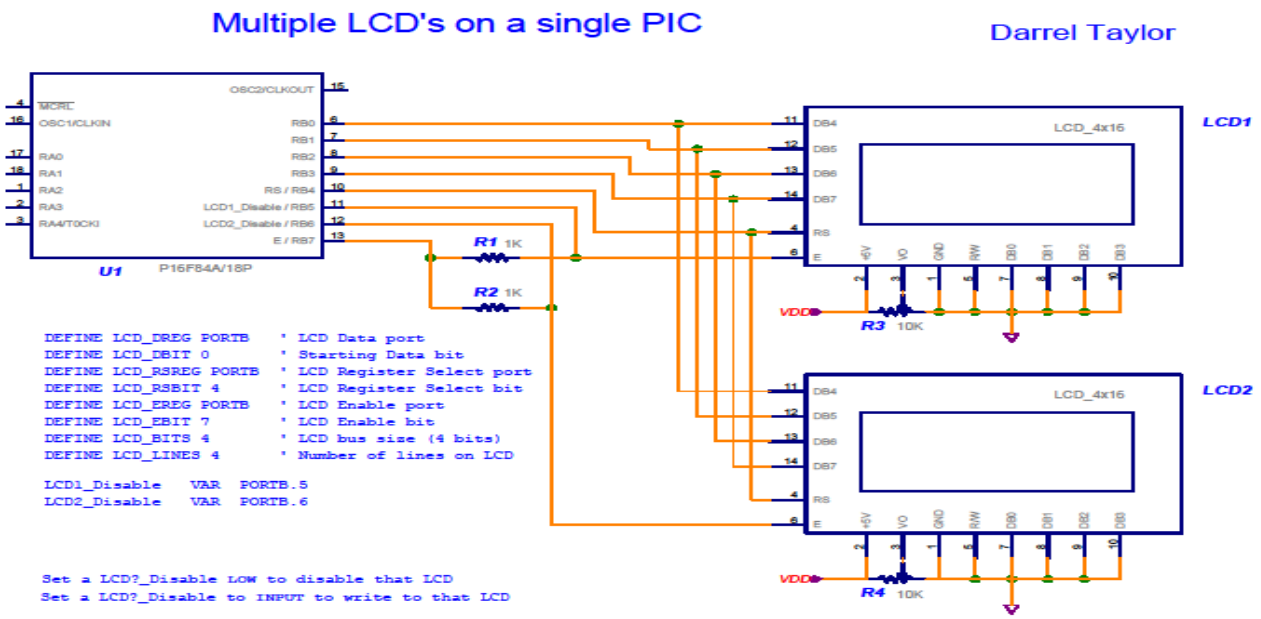


```
DEFINE LCD_DREG PORTB ' LCD Data port
DEFINE LCD_DBIT 0 ' starting Data bit (0 or 4) if 4-bit bus
DEFINE LCD_RSREG PORTB ' LCD Register Select port
DEFINE LCD_RSBIT 4 ' LCD Register Select bit
DEFINE LCD_EREG PORTB ' LCD Enable port
DEFINE LCD_EBIT 7 ' LCD Enable bit
DEFINE LCD_BITS 4 ' LCD bus size (4 or 8 bits)
DEFINE LCD_LINES 4 ' Number of lines on LCD
LCD1_Disable VAR PORTB.5
LCD2_Disable VAR PORTB.6
LCDOUT $FE,1 ' Initialize both LCD's
PAUSE 200
GOSUB USE_LCD1
LCDOUT "This is LCD 1"
GOSUB USE_LCD2
LCDOUT "This is LCD 2"
GOSUB USE_BothLCD
LCDOUT $FE,$C0,"Both LCD's"
END
USE_LCD1:
INPUT LCD1_Disable
LOW LDC2_Disable
RETURN
USE_LCD2:
LOW LCD1_Disable
INPUT LDC2_Disable
RETURN
USE_BothLCD:
INPUT LCD1_Disable
INPUT LDC2_Disable
RETURN
```