TEMP CCT B

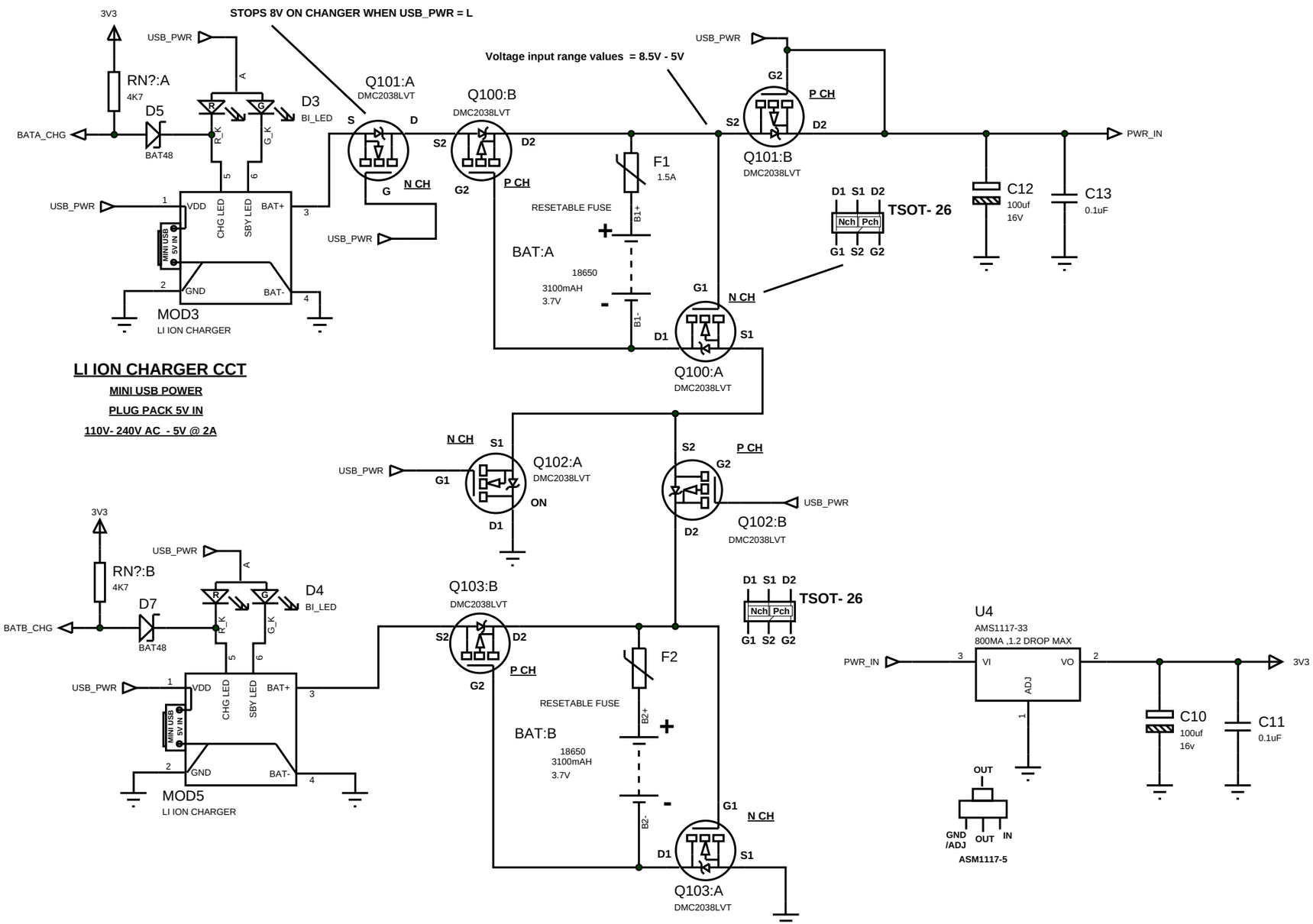
STOPS 8V ON CHANGER WHEN USB_PWR = L
Voltage input range values = 8.5V - 5V
3V3
USB_PWR
RN?:A
4K7
D5
BAT48
BATA_CHG
D3
BI_LED
R_K
G_K
Q101:A
DMC2038LVT
Q100:B
DMC2038LVT
N CH
P CH
RESETABLE FUSE
F1
1.5A
BAT:A
18650
3100mAH
3.7V
B1+
B1-
Q101:B
DMC2038LVT
TSOT- 26
Nch
Pch
C12
100uf
16V
C13
0.1uF
PWR_IN
VDD
CHG LED
SBY LED
BAT+
GND
BAT-
MINI USB 5V IN
MOD3
LI ION CHARGER
Q100:A
DMC2038LVT
LI ION CHARGER CCT
MINI USB POWER
PLUG PACK 5V IN
110V- 240V AC - 5V @ 2A
Q102:A
DMC2038LVT
ON
Q102:B
DMC2038LVT
RN?:B
4K7
D7
BAT48
BATB_CHG
D4
BI_LED
Q103:B
DMC2038LVT
F2
BAT:B
18650
3100mAH
3.7V
B2+
B2-
Q103:A
DMC2038LVT
MOD5
LI ION CHARGER
U4
AMS1117-33
800MA ,1.2 DROP MAX
VI
VO
ADJ
C10
100uf
16v
C11
0.1uF
OUT
GND /ADJ
IN
ASM1117-5