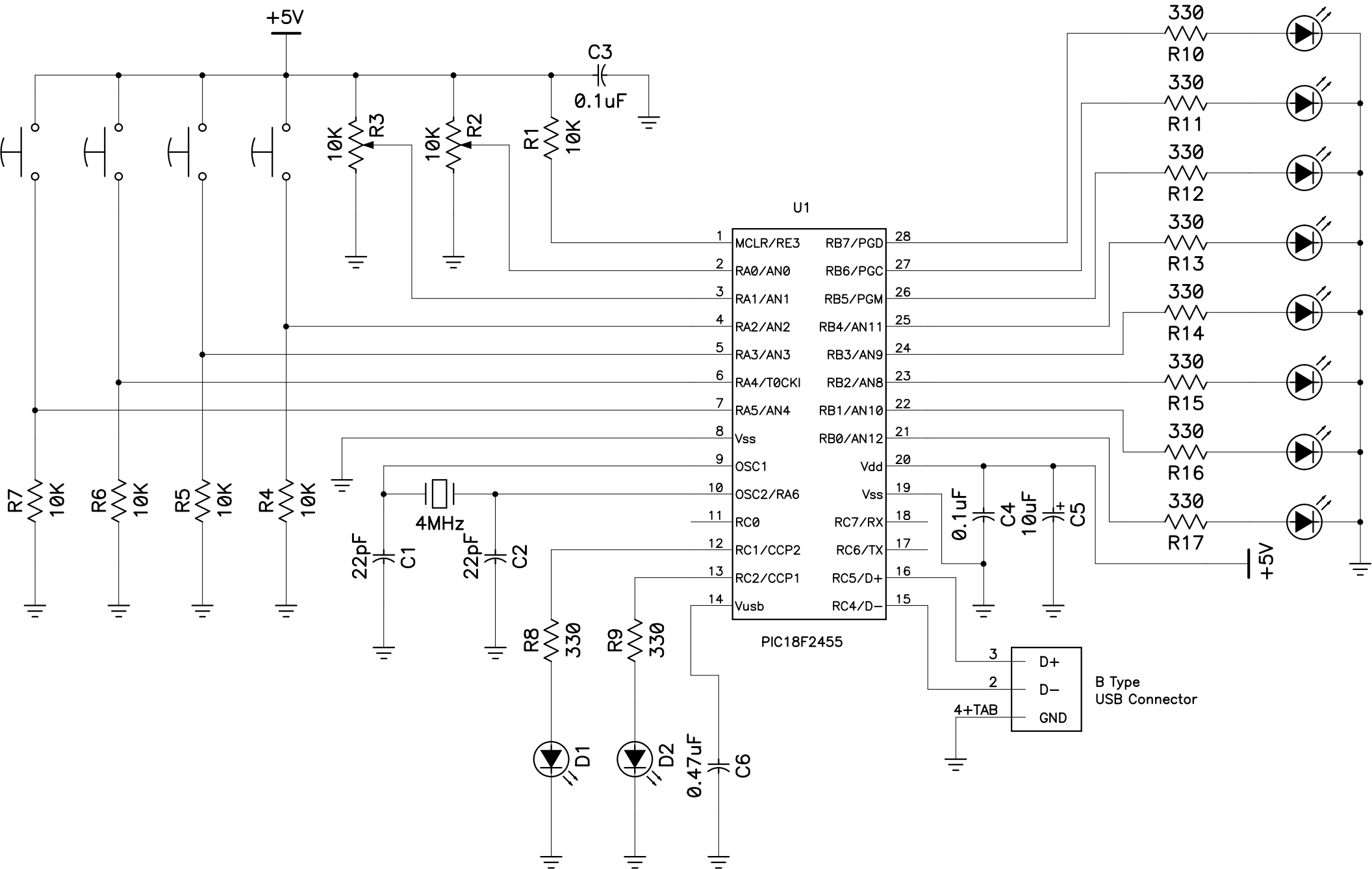
+5V
C3
0.1uF
10K
R3
10K
R2
R1
10K
U1
MCLR/RE3
RA0/AN0
RA1/AN1
RA2/AN2
RA3/AN3
RA4/T0CKI
RA5/AN4
Vss
OSC1
OSC2/RA6
RC0
RC1/CCP2
RC2/CCP1
Vusb
RB7/PGD
RB6/PGC
RB5/PGM
RB4/AN11
RB3/AN9
RB2/AN8
RB1/AN10
RB0/AN12
Vdd
Vss
RC7/RX
RC6/TX
RC5/D+
RC4/D−
PIC18F2455
330
R10
R11
R12
R13
R14
R15
R16
R17
R7
10K
R6
10K
R5
10K
R4
10K
4MHz
22pF
C1
22pF
C2
0.1uF
C4
10uF
C5
+5V
R8
330
R9
330
D1
D2
0.47uF
C6
D+
D−
GND
4+TAB
B Type
USB Connector