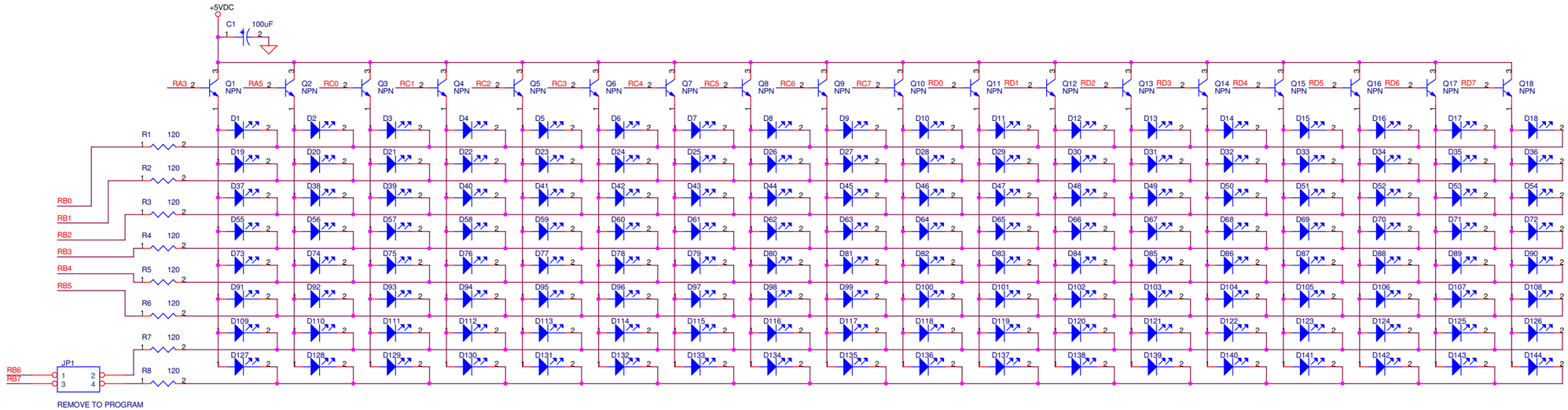

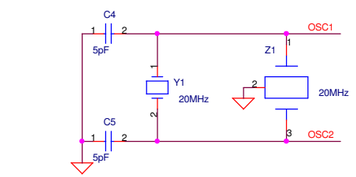

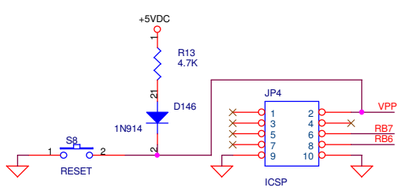

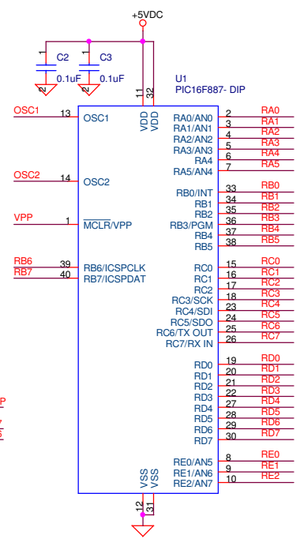

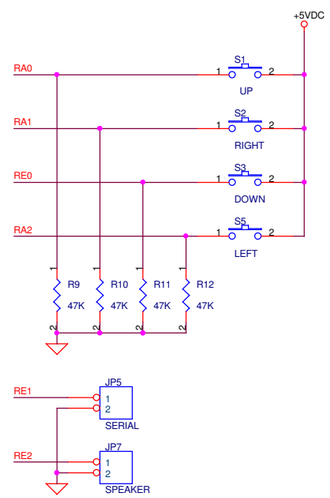

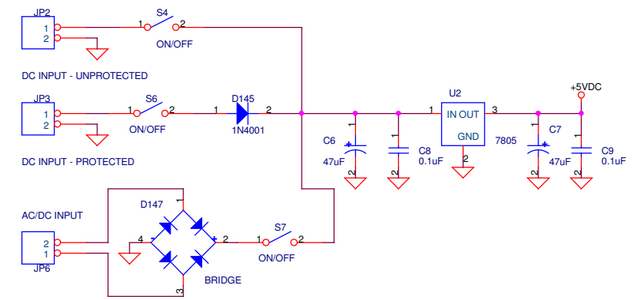

AC/DC INPUT: CAN BE USED WITH A DC INPUT. PLUG POLARITY DOESN'T MATTER.

Title	144 LED GAME CONSOLE	
Size C	Document Number NOT FOR COMMERCIAL USE	Rev 0
Date: Saturday, March 13, 2010	Sheet 1 of 1	