5.6.5 Circuit diagrams

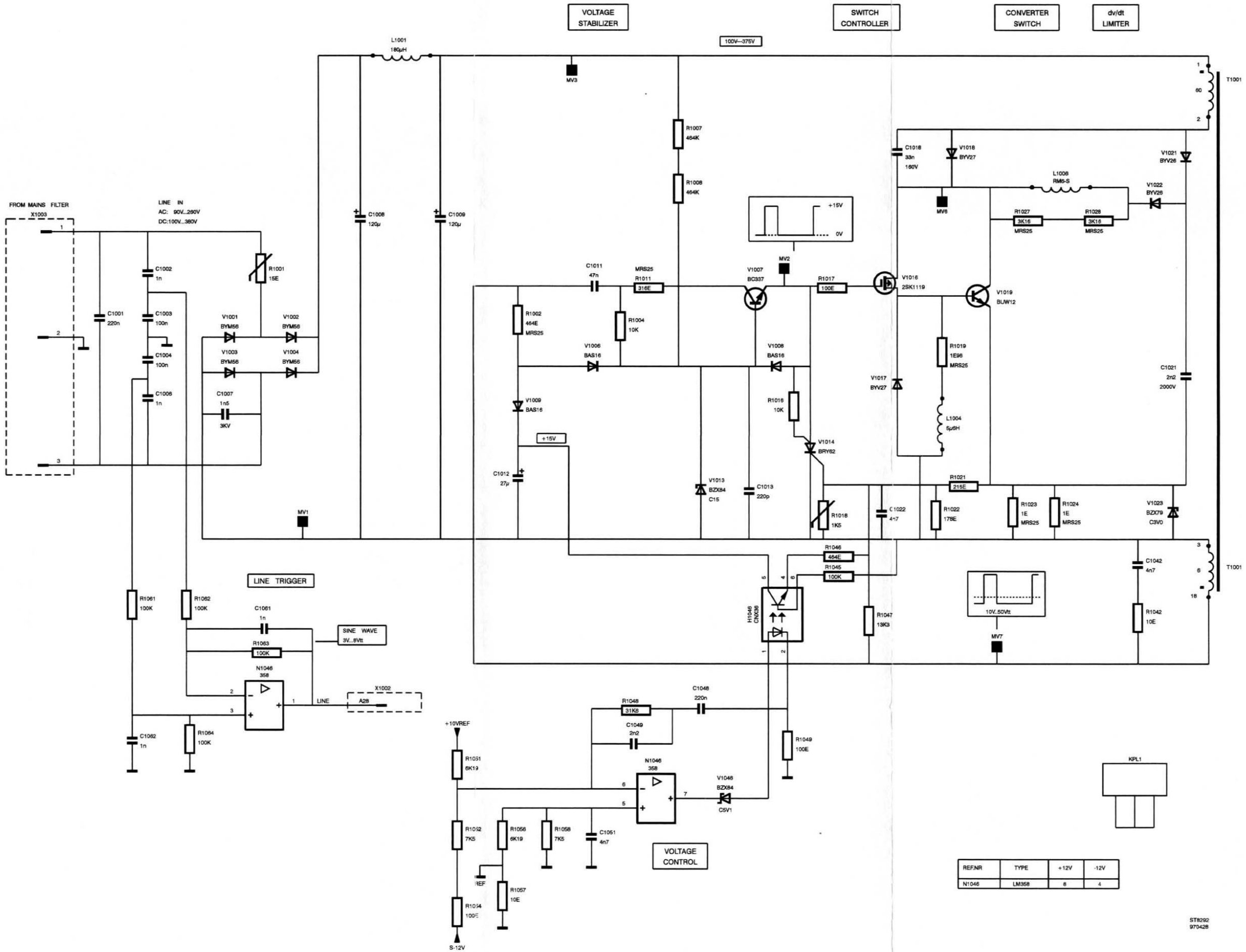

REF.NR	TYPE	+12V	-12V
N1046	LM358	8	4

Diagram 1 - Converter circuit