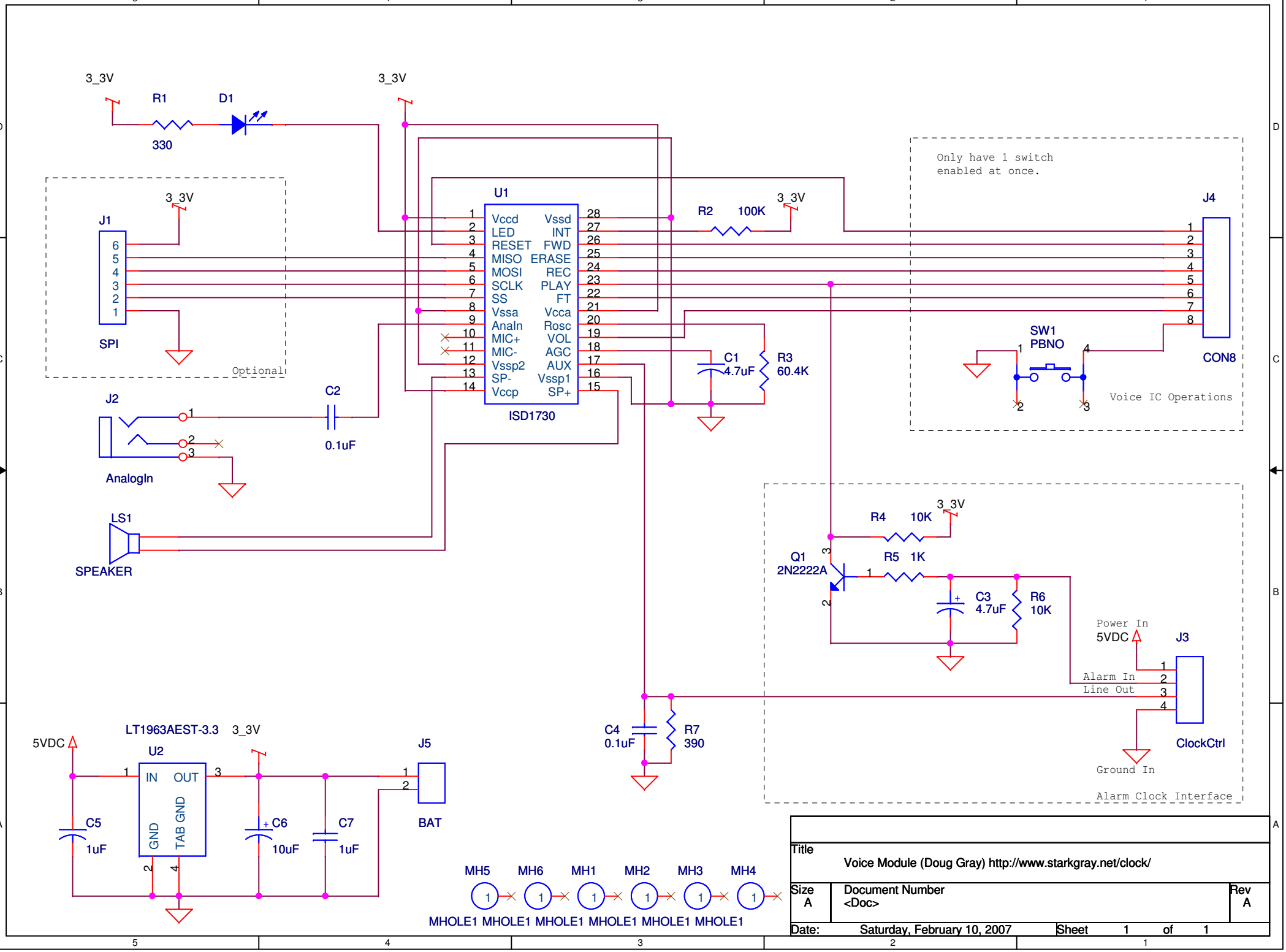
3_3V
R1
330
D1
3_3V
J1
SPI
Optional
U1
Vccd
LED
RESET
MISO
MOSI
SCLK
SS
Vssa
AnaIn
MIC+
MIC-
Vssp2
SP-
Vccp
Vssd
INT
FWD
ERASE
REC
PLAY
FT
Vcca
Rosc
VOL
AGC
AUX
Vssp1
SP+
ISD1730
R2
100K
3_3V
C1
4.7uF
R3
60.4K
J2
AnalogIn
C2
0.1uF
LS1
SPEAKER
Only have 1 switch
enabled at once.
J4
CON8
SW1
PBNO
Voice IC Operations
R4
10K
3_3V
Q1
2N2222A
R5
1K
C3
4.7uF
R6
10K
Power In
5VDC
J3
Alarm In
Line Out
ClockCtrl
Ground In
Alarm Clock Interface
C4
0.1uF
R7
390
5VDC
LT1963AEST-3.3
U2
IN
OUT
GND
TAB GND
3_3V
C5
1uF
C6
10uF
C7
1uF
J5
BAT
MH5
MH6
MH1
MH2
MH3
MH4
MHOLE1 MHOLE1 MHOLE1 MHOLE1 MHOLE1 MHOLE1
Title
Voice Module (Doug Gray) http://www.starkgray.net/clock/
Size
A
Document Number
<Doc>
Rev
A
Date:
Saturday, February 10, 2007
Sheet
1
of
1