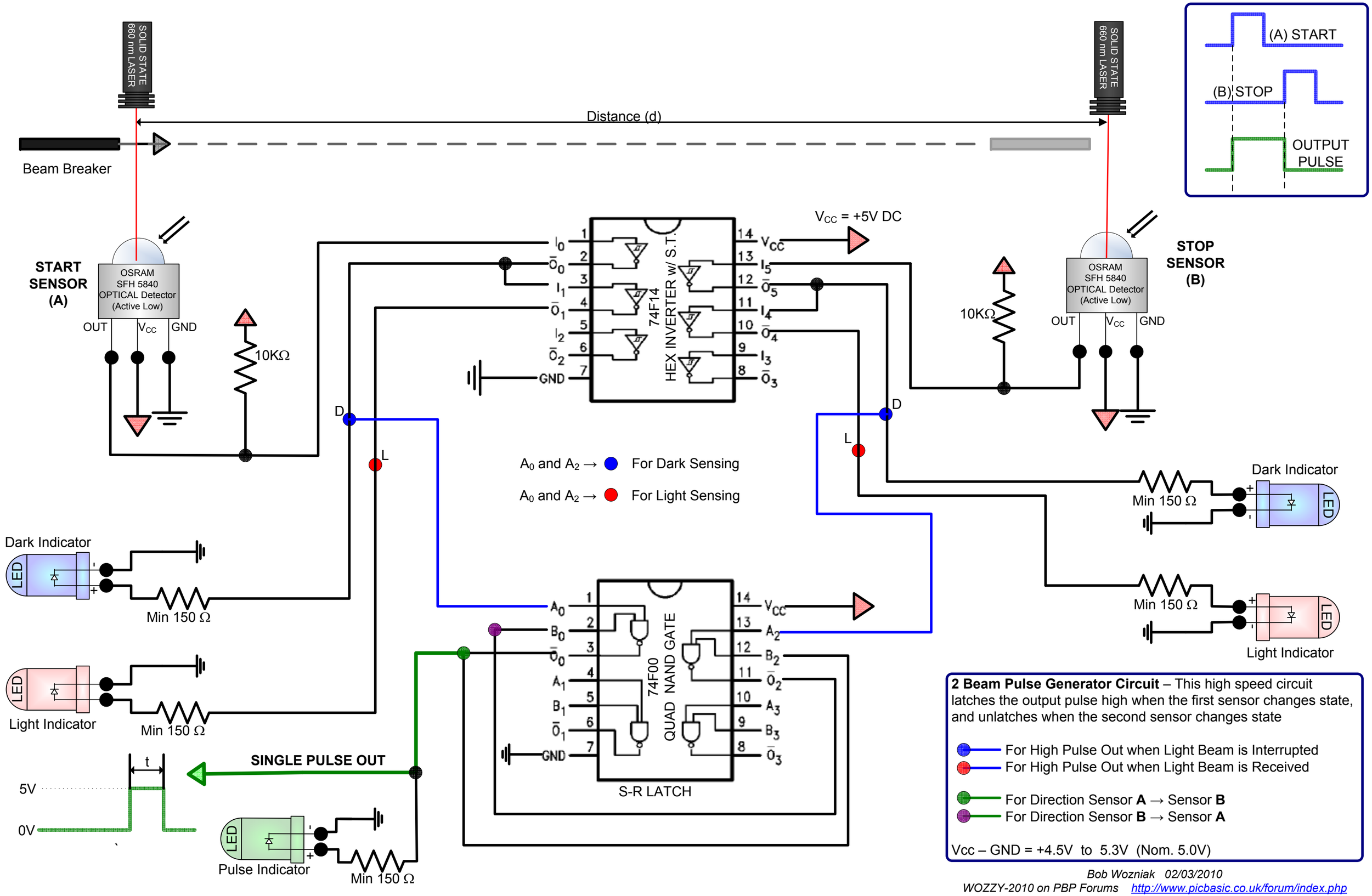

2 Beam Pulse Generator Circuit – This high speed circuit latches the output pulse high when the first sensor changes state, and unlatches when the second sensor changes state

- For High Pulse Out when Light Beam is Interrupted
- For High Pulse Out when Light Beam is Received
- For Direction Sensor **A** → Sensor **B**
- For Direction Sensor **B** → Sensor **A**

Vcc – GND = +4.5V to 5.3V (Nom. 5.0V)

Bob Wozniak 02/03/2010
WOZZY-2010 on PBP Forums http://www.picbasic.co.uk/forum/index.php