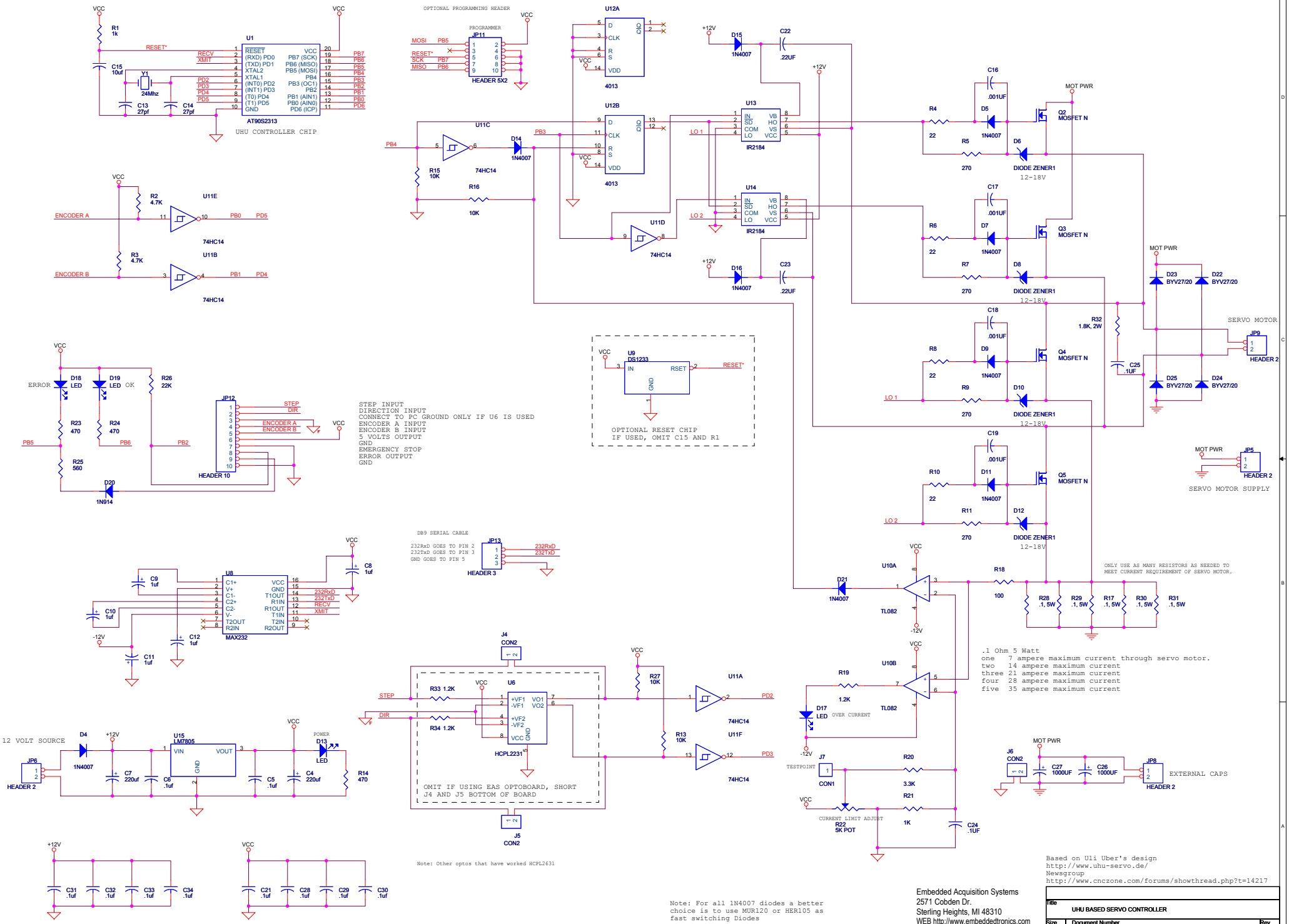
UHU CONTROLLER CHIP
AT90S2313
OPTIONAL PROGRAMMING HEADER
HEADER 5X2
4013
74HC14
IR2184
DIODE ZENER1
12-18V
MOSFET N
SERVO MOTOR
HEADER 2
SERVO MOTOR SUPPLY
HEADER 10
OPTIONAL RESET CHIP
IF USED, OMIT C15 AND R1
STEP INPUT
DIRECTION INPUT
CONNECT TO PC GROUND ONLY IF U6 IS USED
ENCODER A INPUT
ENCODER B INPUT
5 VOLTS OUTPUT
GND
EMERGENCY STOP
ERROR OUTPUT
GND
DB9 SERIAL CABLE
232RxD GOES TO PIN 2
232TxD GOES TO PIN 3
GND GOES TO PIN 5
HEADER 3
MAX232
12 VOLT SOURCE
HEADER 2
OMIT IF USING EAS OPTOBOARD, SHORT
J4 AND J5 BOTTOM OF BOARD
Note: Other optos that have worked HCPL2631
ONLY USE AS MANY RESISTORS AS NEEDED TO
MEET CURRENT REQUIREMENT OF SERVO MOTOR.
.1 Ohm 5 Watt
one 7 ampere maximum current through servo motor.
two 14 ampere maximum current
three 21 ampere maximum current
four 28 ampere maximum current
five 35 ampere maximum current
OVER CURRENT
CURRENT LIMIT ADJUST
EXTERNAL CAPS
Note: For all 1N4007 diodes a better
choice is to use MUR120 or HER105 as
fast switching Diodes
Based on Uli Uber's design
http://www.uhu-servo.de/
Newsgroup
http://www.cnczone.com/forums/showthread.php?t=14217
Embedded Acquisition Systems
2571 Cobden Dr.
Sterling Heights, MI 48310
WEB http://www.embeddedtronics.com
Copyright 2007
Title
UHU BASED SERVO CONTROLLER
Size C
Document Number
<Doc>
Rev D
Date: Friday, May 29, 2009
Sheet 1 of 1