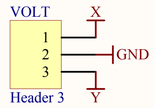

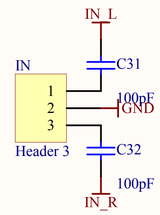

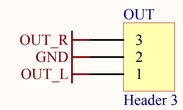

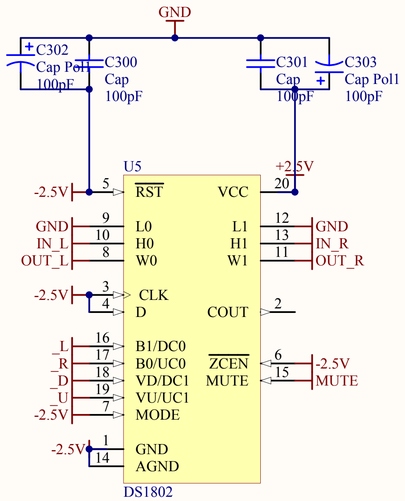

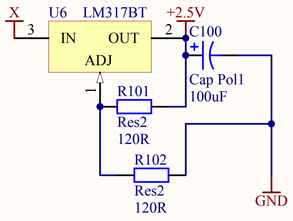

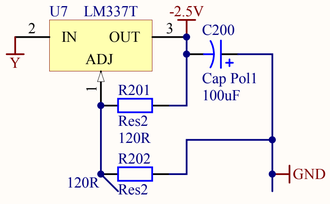

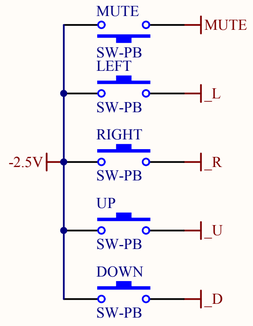

Title		
Size B	Number	Revision
Date: 09/06/08	Sheet of	
File: C:\ELECTRONIC_PROJECTS\..\buffer.SchDoc	Drawn By:	

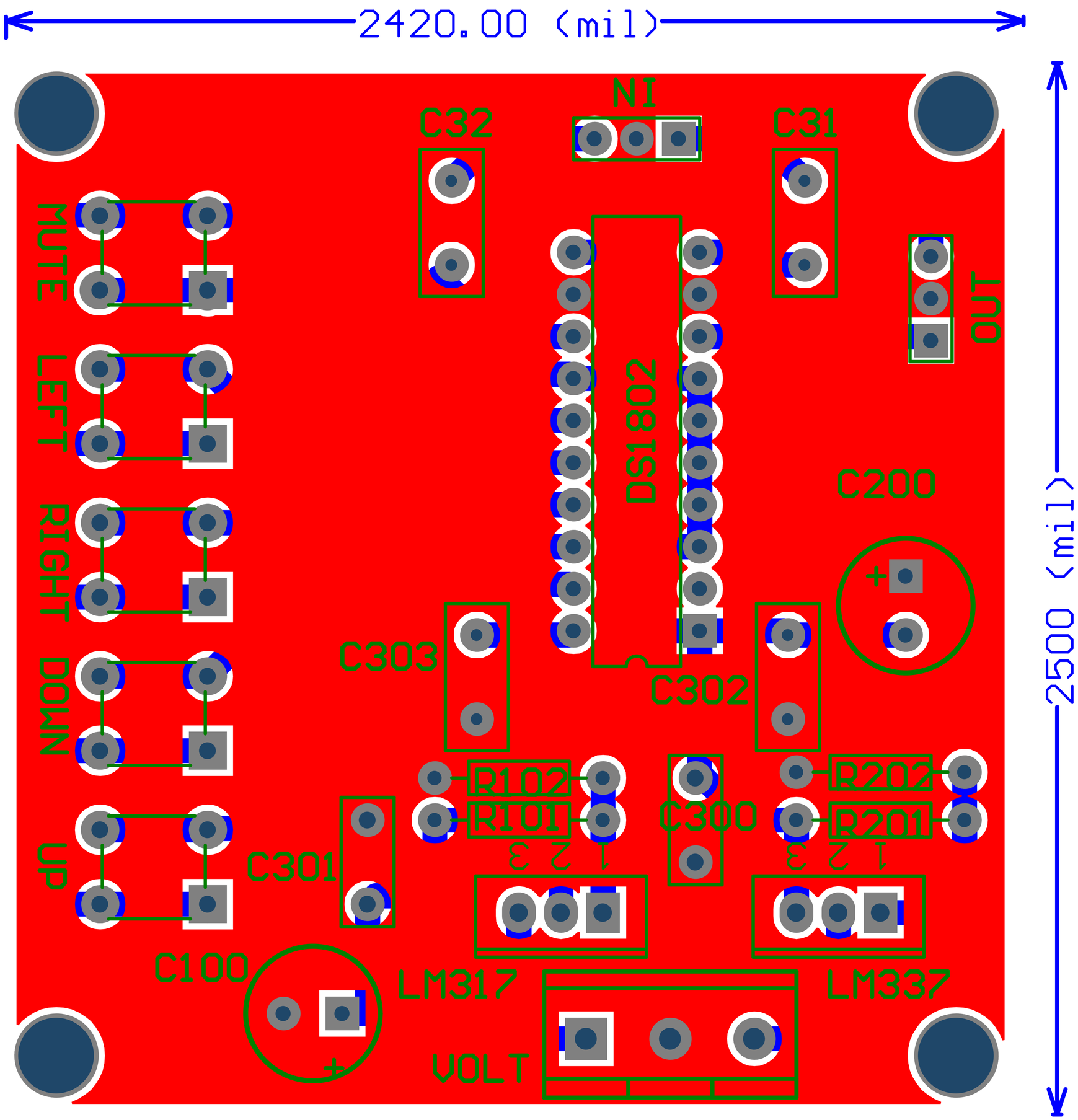
2420.00 (mil)
2500 (mil)
NI
C32
C31
OUT
MUTE
LEFT
RIGHT
DOWN
UP
DS1802
C200
C303
C302
R102
R101
R202
R201
C300
C301
C100
LM317
LM337
VOLT