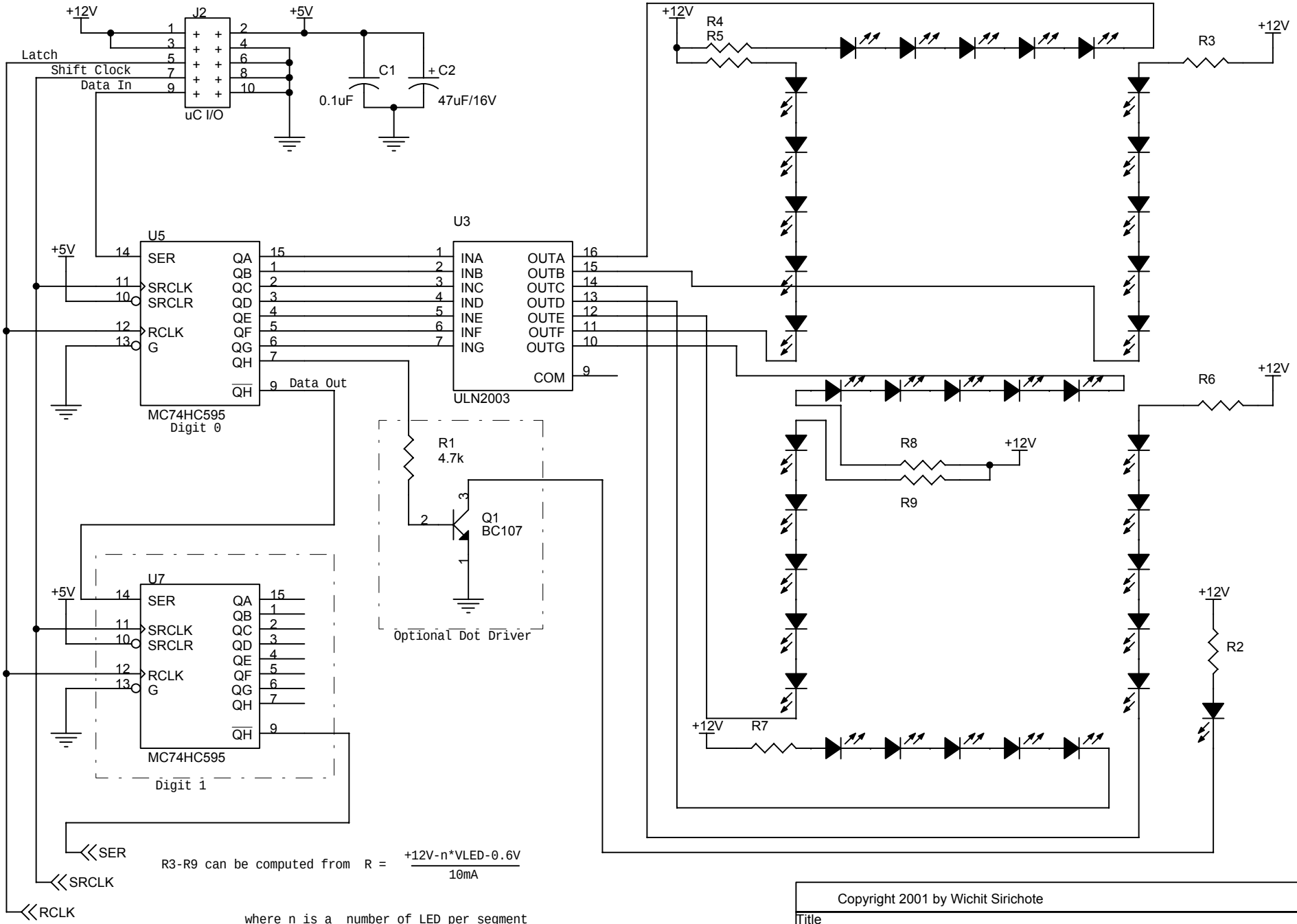
+12V
J2
+5V
Latch
Shift Clock
Data In
uC I/O
C1
0.1uF
C2
47uF/16V
U5
SER
SRCLK
SRCLR
RCLK
G
QA
QB
QC
QD
QE
QF
QG
QH
QH
Data Out
MC74HC595
Digit 0
U3
INA
INB
INC
IND
INE
INF
ING
OUTA
OUTB
OUTC
OUTD
OUTE
OUTF
OUTG
COM
ULN2003
R1
4.7k
Q1
BC107
Optional Dot Driver
U7
MC74HC595
Digit 1
R4
R5
R3
R6
R8
R9
R7
R2
SER
SRCLK
RCLK
R3-R9 can be computed from R = (+12V-n*VLED-0.6V)/10mA
where n is a number of LED per segment
and VLED is forward voltage of the LED
Copyright 2001 by Wichit Sirichote
Title
SPI Interface BIG 7-SEG LED