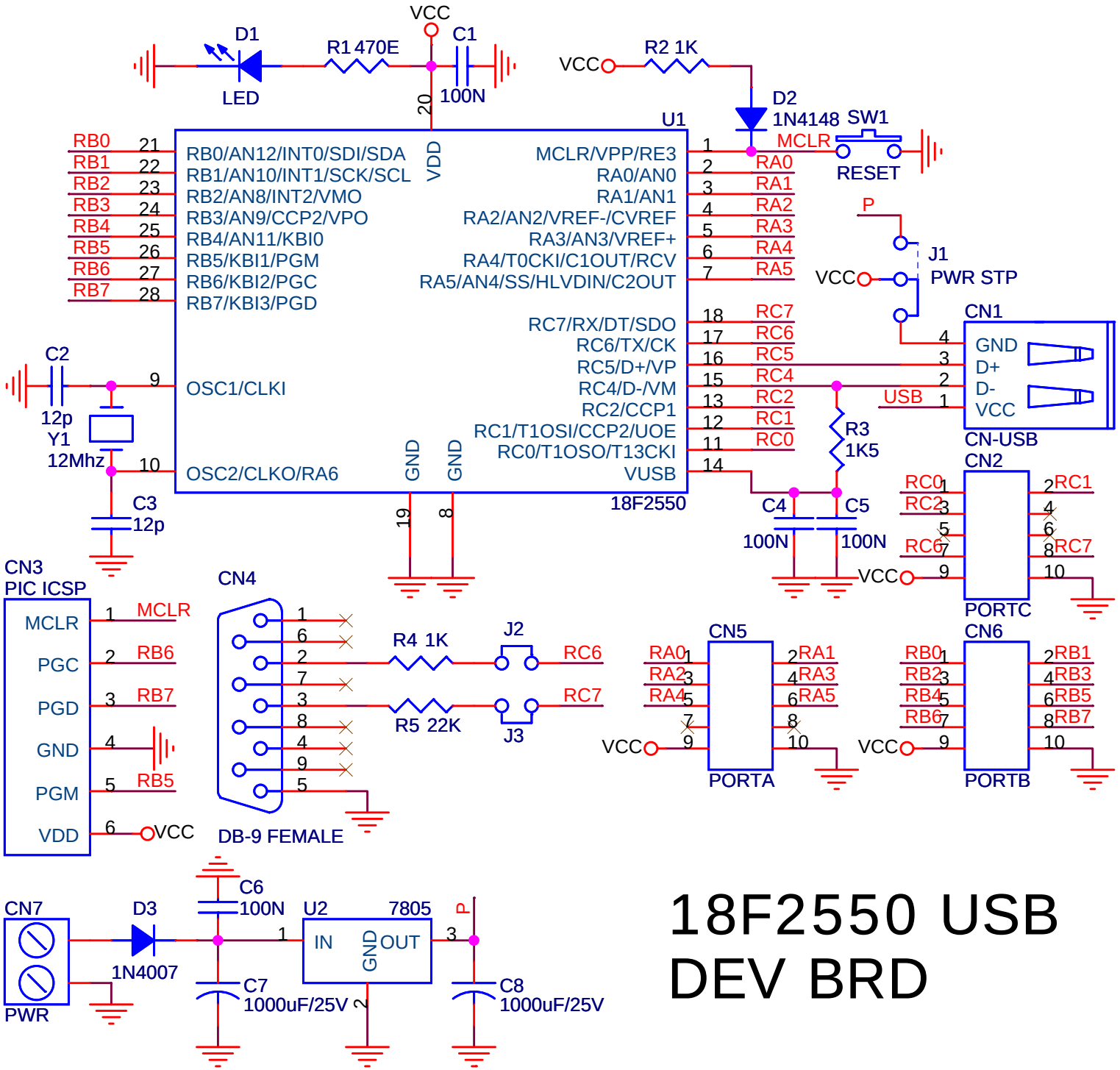
VCC
D1
LED
R1 470E
C1
100N
20
VCC
R2 1K
D2
1N4148
SW1
MCLR
RESET
U1
RB0 21
RB1 22
RB2 23
RB3 24
RB4 25
RB5 26
RB6 27
RB7 28
RB0/AN12/INT0/SDI/SDA
RB1/AN10/INT1/SCK/SCL
RB2/AN8/INT2/VMO
RB3/AN9/CCP2/VPO
RB4/AN11/KBI0
RB5/KBI1/PGM
RB6/KBI2/PGC
RB7/KBI3/PGD
VDD
MCLR/VPP/RE3 1 MCLR
RA0/AN0 2 RA0
RA1/AN1 3 RA1
RA2/AN2/VREF-/CVREF 4 RA2
RA3/AN3/VREF+ 5 RA3
RA4/T0CKI/C1OUT/RCV 6 RA4
RA5/AN4/SS/HLVDIN/C2OUT 7 RA5
RC7/RX/DT/SDO 18 RC7
RC6/TX/CK 17 RC6
RC5/D+/VP 16 RC5
RC4/D-/VM 15 RC4
RC2/CCP1 13 RC2
RC1/T1OSI/CCP2/UOE 12 RC1
RC0/T1OSO/T13CKI 11 RC0
VUSB 14
OSC1/CLKI 9
OSC2/CLKO/RA6 10
GND 19
GND 8
18F2550
P
J1
PWR STP
VCC
CN1
GND 4
D+ 3
D- 2
VCC 1
USB
CN-USB
C2
12p
Y1
12Mhz
C3
12p
R3
1K5
C4
100N
C5
100N
CN2
RC0 1
RC2 3
RC6 7
VCC 9
2 RC1
4
6
8 RC7
10
PORTC
CN3
PIC ICSP
MCLR 1 MCLR
PGC 2 RB6
PGD 3 RB7
GND 4
PGM 5 RB5
VDD 6 VCC
CN4
DB-9 FEMALE
R4 1K
R5 22K
J2
J3
RC6
RC7
CN5
RA0 1
RA2 3
RA4 5
7
VCC 9
2 RA1
4 RA3
6 RA5
8
10
PORTA
CN6
RB0 1
RB2 3
RB4 5
RB6 7
VCC 9
2 RB1
4 RB3
6 RB5
8 RB7
10
PORTB
CN7
PWR
D3
1N4007
C6
100N
C7
1000uF/25V
U2
7805
IN 1
GND 2
OUT 3
P
C8
1000uF/25V
18F2550 USB
DEV BRD