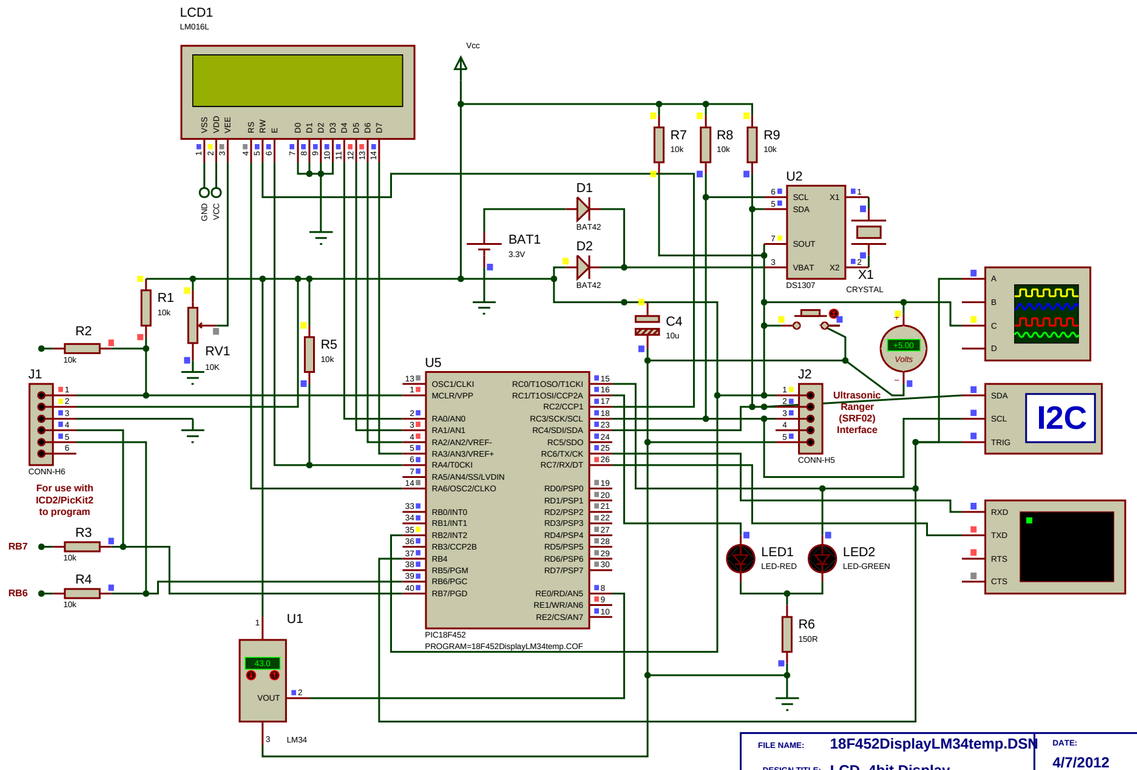

FILE NAME:	18F452DisplayLM34temp.DSN
DESIGN TITLE:	LCD_4bit Display
PATH:	C:\Program Files (x86)\Labcenter Electronics\Proteus 7 Professional\Ellis_in
BY:	John Ellis, LodeStar Assoc. In
REV:	A
DATE:	4/7/2012
PAGE:	1 of 2
TIME:	2:48:10 PM