Multiple LCD's on a single PIC

Darrel Taylor

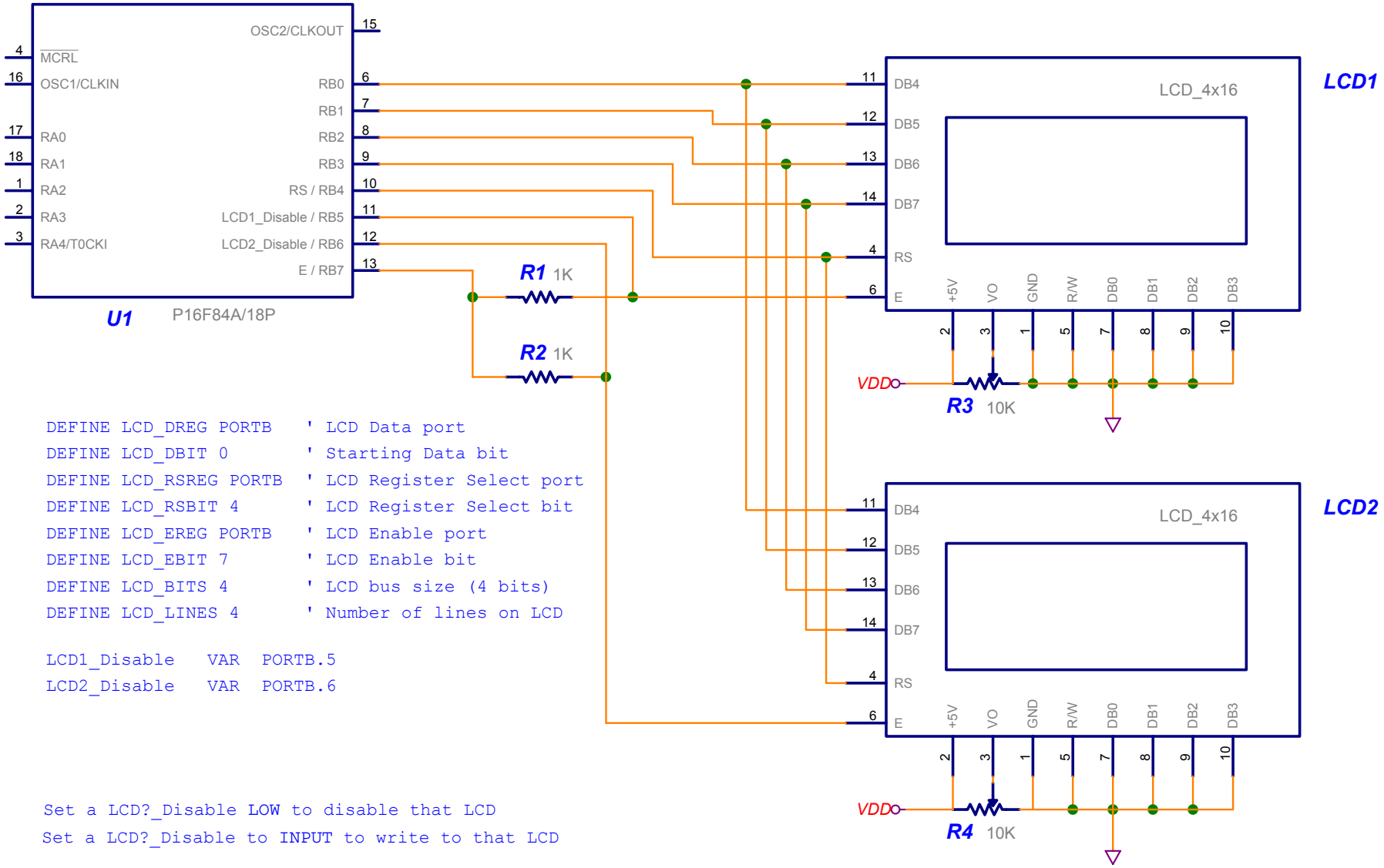


```
DEFINE LCD_DREG PORTB    ' LCD Data port
DEFINE LCD_DBIT 0        ' Starting Data bit
DEFINE LCD_RSREG PORTB   ' LCD Register Select port
DEFINE LCD_RSBIT 4       ' LCD Register Select bit
DEFINE LCD_EREG PORTB    ' LCD Enable port
DEFINE LCD_EBIT 7        ' LCD Enable bit
DEFINE LCD_BITS 4        ' LCD bus size (4 bits)
DEFINE LCD_LINES 4       ' Number of lines on LCD

LCD1_Disable   VAR  PORTB.5
LCD2_Disable   VAR  PORTB.6
```

Set a LCD?_Disable LOW to disable that LCD

Set a LCD?_Disable to INPUT to write to that LCD